FIG.823

STRAINERS zSTRA



Body material	Nominal pressure	Nominal diameter	Max. temperature
A Grey cast iron	**C** 16 bar	DN **10-80**	200°C

CE

correspond to the pressure equipment directive 2014/68/UE
marking CE for DN≥32

FEATURES

- compact settlement
- environment-friendly
- tests acc. to EN - 12266 - 1
- screen made of stainless steel
- cleaning of screen without disassembling

APPLICATION

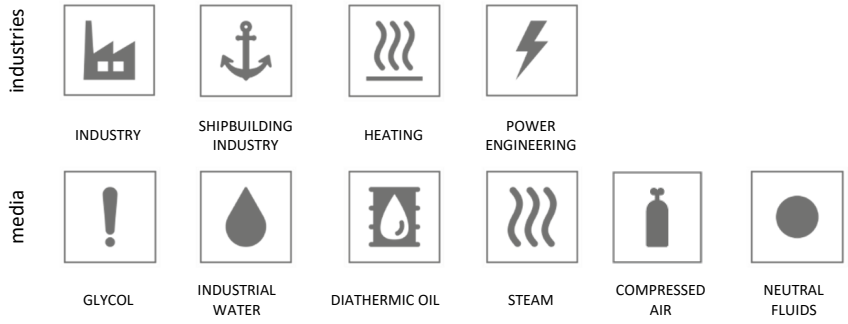

Data given can be changed without notice.

Edition 01/2026

ZETKAMA Sp. z o.o.
Ul. 3 Maja 12
PL 57-410 Ścinawka Średnia

E-mail export@zetkama.com.pl
www.zetkama.com

FIG.823

MATERIALS, DIMENSIONS

type 09 (DN65 – 80)

type 10 (DN 50)

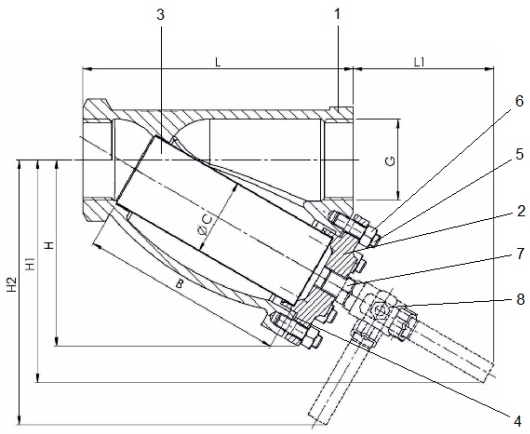

type 10 (DN10 – 40)

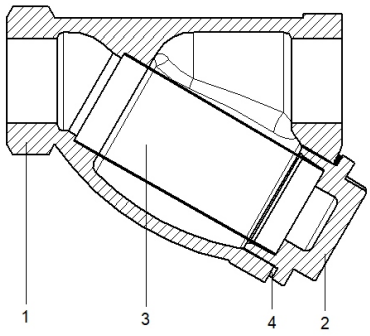

	Body material	A	
	Type	**10 (DN 10-40)**	**09; 10 (DN50-80)**
1	Body	EN- GJL- 250 5.1301 (ex. JL 1040)	
2	Cover	EN- GJS- 500-7 5.3200 (ex.JS 1050)	EN- GJL- 250 5.1301 (ex. JL 1040)
3	Screen	X5CrNi 18-10 1.4301	
4	Gasket	Carbamide-caoutchouc	
5	Studs	---	5.6 A3A
6	Hexagon nut	---	5 – A3A
7	Nipple*	3/8'-3/8'	1/2'-1/2'
8	Ball valve**	3/8'	1/2'
Max. temperature		**200°C**	

*for type with ball valve CuZn40Pb

** on client's request type with ball valve (max. Temp. 180°C)

DN	**10**	**15**	**20**	**25**	**32**	**40**	**50**	**65**	**80**
G	3/8"	1/2"	3/4"	1"	1 1/4"	1 1/2"	2"	2 1/2"	3"
L (mm)	72	85	100	120	140	160	205	245	265
L1 (mm)	-	115	115	115	115	115	110	110	110
H (mm)	45	52	62	73	86	98	144	172	186
H1 (mm)	-	80	90	110	114	126	172	200	224
H2 (mm)	-	105	112	122	132	146	204	232	246
C (mm)	18	23	28	36	42	50	60	76	83
B (mm)	48	56	68	82	98	114	154	187	200
Weight (kg)	0,3	0,5	0,8	1,1	1,9	2,5	6,1	8,5	12,0
Weight with ball valve(kg)	-	0,72	1,02	1,32	2,12	4,17	6,32	8,79	12,29

Data given can be changed without notice. **Edition 01/2026**

ZETKAMA Sp. z o.o.
Ul. 3 Maja 12
PL 57-410 Ścinawka Średnia

E-mail export@zetkama.com.pl
www.zetkama.com

FIG.823

PRESSURE-TEMPERATURE RATINGS

Acc. EN 1092-2	PN		-10°C÷120°C	150°C	200°C
EN-GJL250	16	bar	16	14,4	12,8

SCREENS

Screen	Performance	DN	Mash	Mesh es screen/cm²	Type
Standard	F45	10-50	1,0	45	10
	F28	65-80	1,25	28	09
Other performance	screen cartridges F100 (0,6), F200 (0,5), F300 (0,4), F400 (0,32), F600 (0,25)				

HYDRAULIC CHARACTERISTIC

DN	10	15	20	25	32	40	50	65	80
Screen	Kv . [m³/h]								
Standard	5,9	9,7	16,0	25,2	40,7	50,4	87,2	144,5	188,4
F100 (0,63)	5,8	9,5	15,6	24,5	39,6	48,7	84,7	139,4	182,2
F200 (0,50)	5,8	9,5	15,5	24,3	39,3	48,2	83,8	137,7	179,9
F300 (0,40)	5,7	9,3	15,1	23,5	37,9	46,2	80,4	131,0	171,3
F400 (0,32)	5,7	9,2	14,9	23,2	37,3	45,4	78,5	127,6	166,8
F600 (0,25)	5,7	9,2	14,8	23,1	37,2	45,3	78,4	127,3	166,5

ZETKAMA Sp. z o.o.
Ul. 3 Maja 12
PL 57-410 Ścinawka Średnia

E-mail export@zetkama.com.pl
www.zetkama.com

FIG.823

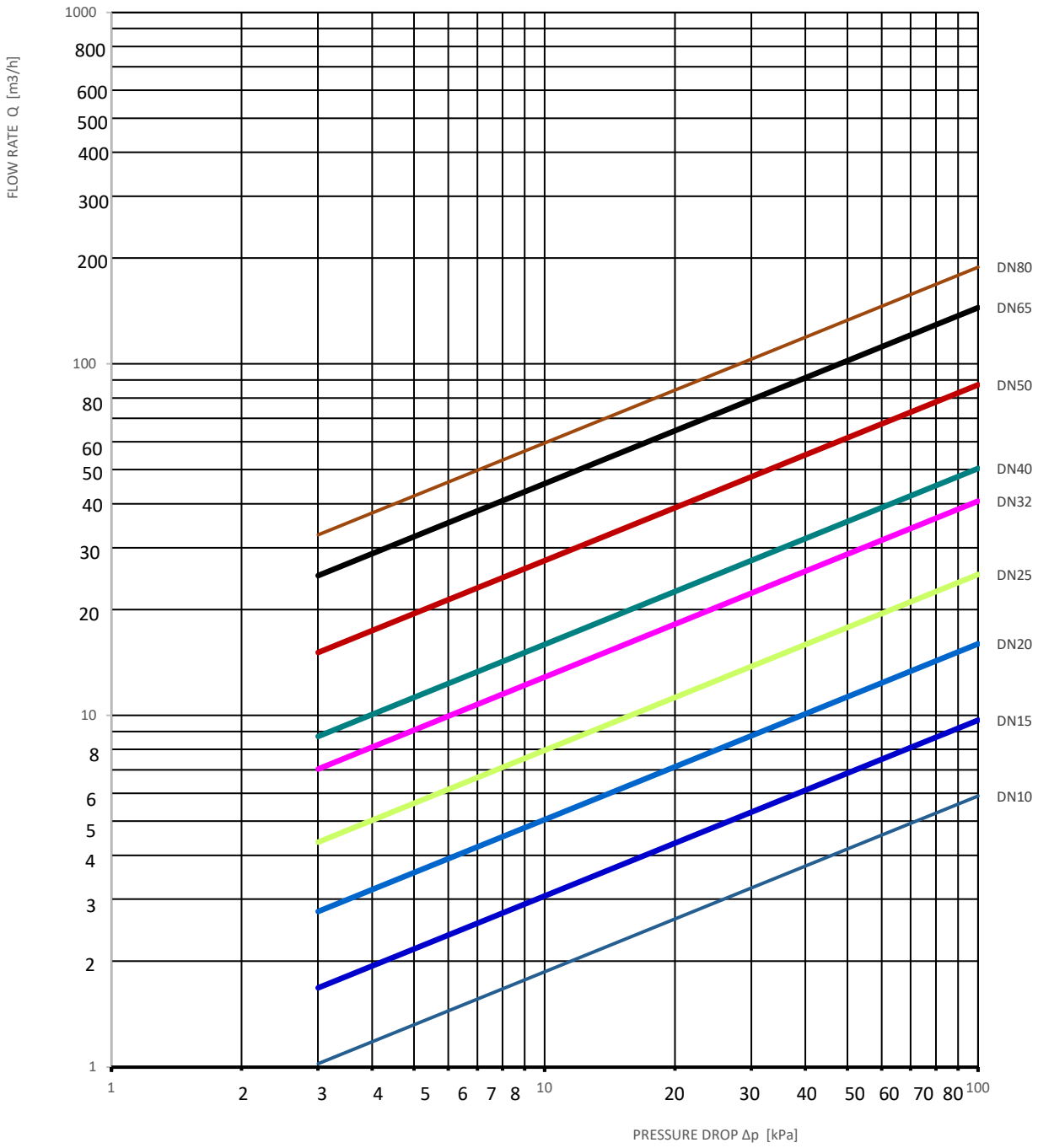

ZETKAMA Sp. z o.o.
Ul. 3 Maja 12
PL 57-410 Ścinawka Średnia

E-mail export@zetkama.com.pl
www.zetkama.com

FIG.823

TYPE

Figure	Body material	Nominal diameter	Nominal pressure	Type
823	**A** Grey cast iron EN-GJL-250	**10-50** mm	**C** 16 bar	**10** mesh 1,00 mm, 45 mesh/cm^2
		65-80 mm	**C** 16 bar	**09** mesh 1,25 mm, 28 mesh/cm^2
		10-50 mm	**C** 16 bar	**30** mesh 1,00 mm, 45 mesh/cm^2, with magnetic cartridge
		65-80 mm	**C** 16 bar	**29** mesh 1,25 mm, 28 mesh/cm^2 , with magnetic cartridge
		10-80 mm	**C** 16 bar	**04** mesh 0,63 mm, 100 mesh/cm^2
		10-80 mm	**C** 16 bar	**05** mesh 0,50 mm, 200 mesh/cm^2
		10-80 mm	**C** 16 bar	**06** mesh 0,40 mm, 300 mesh/cm^2
		10-80 mm	**C** 16 bar	**07** mesh 0,32 mm, 400 mesh/cm^2
		10-80 mm	**C** 16 bar	**08** mesh 0,25 mm, 600 mesh/cm^2
		10-80 mm	**C** 16 bar	**24** mesh 0,63 mm, 100 mesh/cm^2, with magnetic cartridge
		10-80 mm	**C** 16 bar	**25** mesh 0,50 mm, 200 mesh/cm^2, with magnetic cartridge
		10-80 mm	**C** 16 bar	**26** mesh 0,40 mm, 300 mesh/cm^2, with magnetic cartridge
		10-80 mm	**C** 16 bar	**27** mesh 0,32 mm, 400 mesh/cm^2, with magnetic cartridge
		10-80 mm	**C** 16 bar	**28** mesh 0,25 mm, 600 mesh/cm^2, with magnetic cartridge

ZETKAMA Sp. z o.o.
Ul. 3 Maja 12
PL 57-410 Ścinawka Średnia

E-mail export@zetkama.com.pl
www.zetkama.com

FIG.823

ORDERING

Figure		Body material		Nominal diameter		Nominal pressure		Type
823		A Grey cast iron EN-GJL-250		10-50 mm		C 16 bar		10 mesh 1,00 mm, 45 mesh/cm^2

Order example acc. index **823 A 050 C 10**

Strainer, ends threaded, form Y-type	**823**
Grey cast iron EN-GJL-250	**A**
Nominal diameter (mm)	**050**
Nominal pressure PN 16	**C**
Mesh 1,00 mm, 45 mesh/cm^2	**10**

Data given can be changed without notice. **Edition 01/2026**

ZETKAMA Sp. z o.o.
Ul. 3 Maja 12
PL 57-410 Ścinawka Średnia

E-mail export@zetkama.com.pl
www.zetkama.com